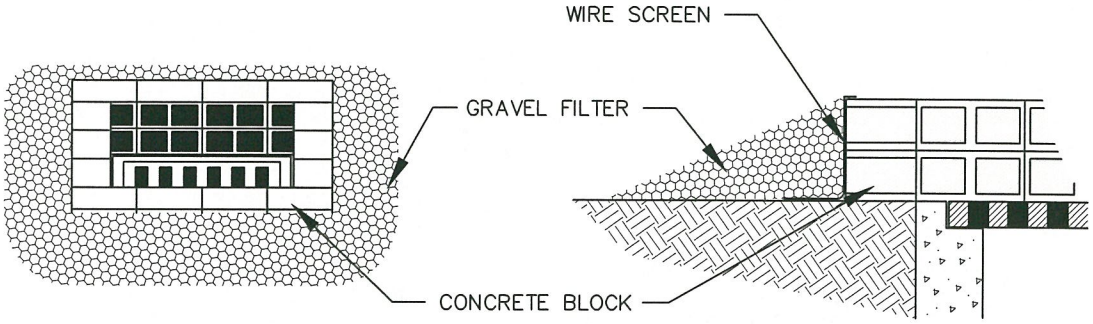

DROP INLET PROTECTION
N.T.S.

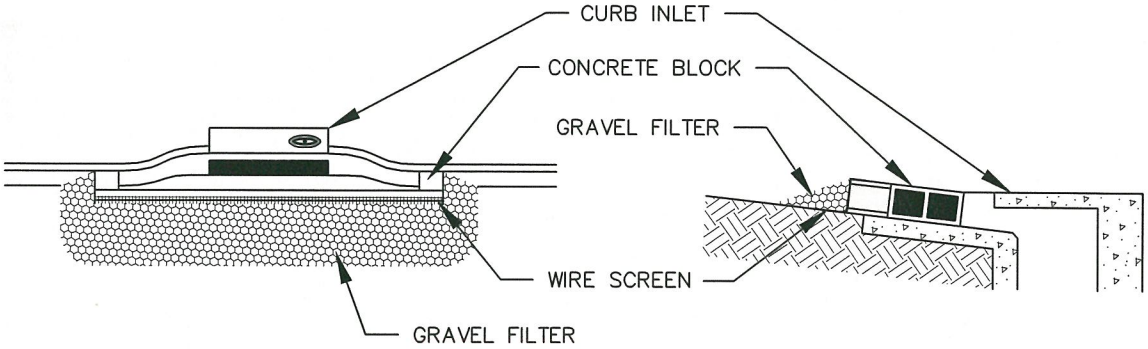

CURB INLET PROTECTION
N.T.S.

DISCLAIMER:
The use of this standard is governed by the City of Wichita Falls Engineering Department. No warranty of any kind is made by the City of Wichita Falls for any purpose whatsoever. The City of Wichita Falls assumes no responsibility for the conversion of this standard to other formats for incorrect results or damages resulting from its use.

Wichita Falls TEXAS

Block-Gravel.dwg
ACAD DRAWING NAME

NOV 03
DATE DRAWN

1130-00
STANDARD DRAWING NO.

NO.	DATE	DESCRIPTION	BY

R E V I S I O N S

CITY OF WICHITA FALLS, TX

INLET PROTECTION
BLOCK AND GRAVEL

APPROVED

Jeffrey L. Hogan, P.E.
CITY ENGINEER

NOV 2003
DATE