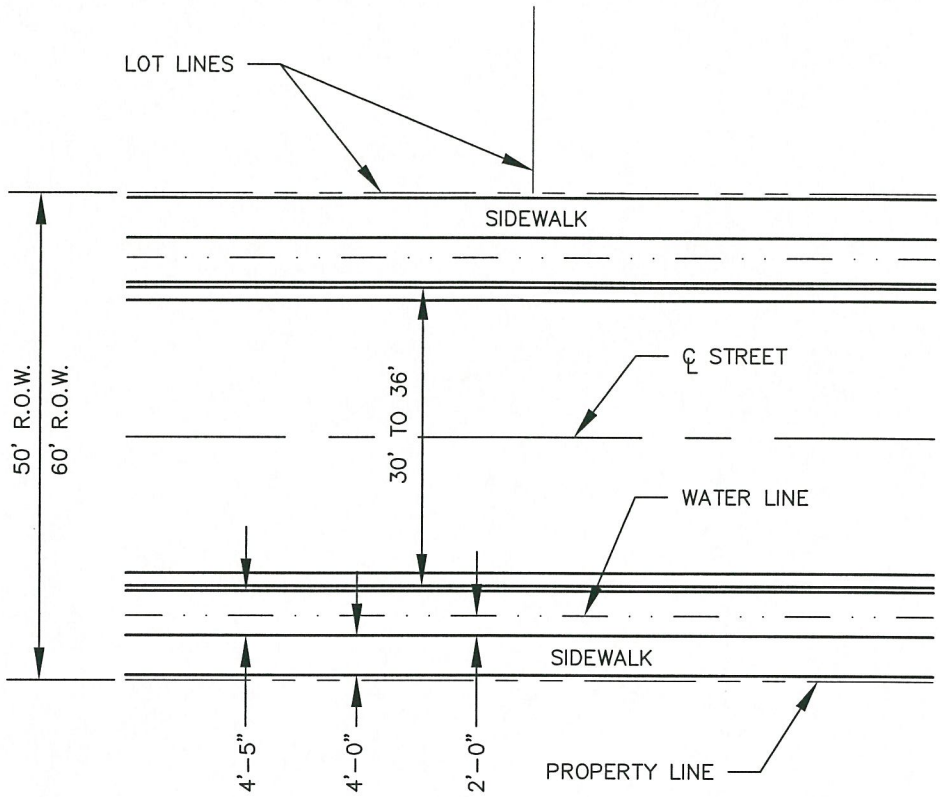

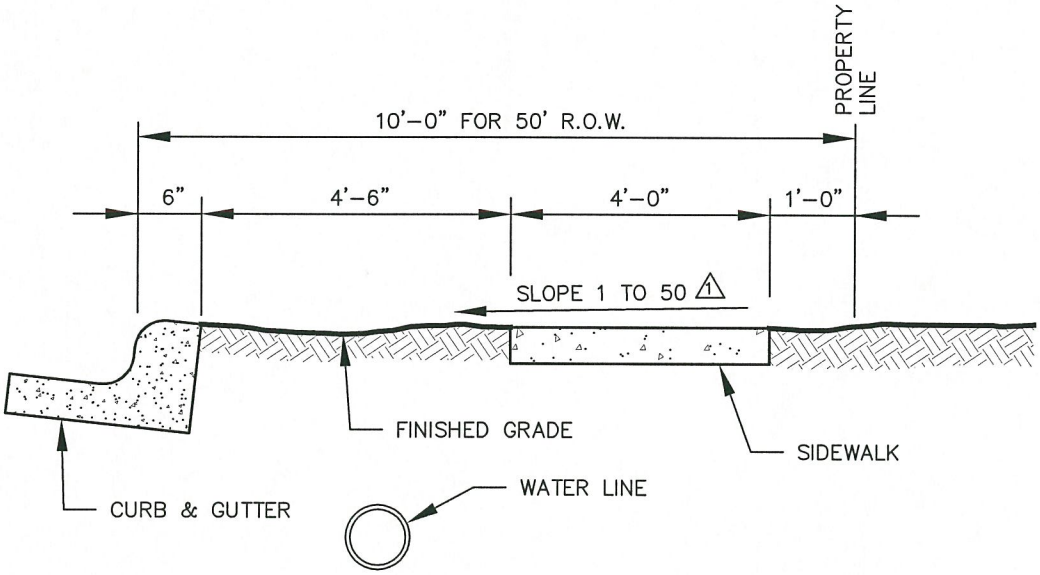

DISCLAIMER:
The use of this standard is governed by the City of Wichita Falls Engineering Department. No warranty of any kind is made by the City of Wichita Falls for any purpose whatsoever. The City of Wichita Falls assumes no responsibility for the conversion of this standard to other formats for incorrect results or damages resulting from its use.

Wichita Falls TEXAS

utiloc.dwg
ACAD DRAWING NAME

DEC 03
DATE DRAWN

4000-00
STANDARD DRAWING NO.

NO.	DATE	DESCRIPTION	BY
1	03/05	SLOPE CHANGE	DJB

REVISIONS

CITY OF WICHITA FALLS, TX

UTILITY LOCATION IN STREET R.O.W.

APPROVED

Jeffrey L. Hogan, P.E.
CITY ENGINEER

MAR 2005
DATE